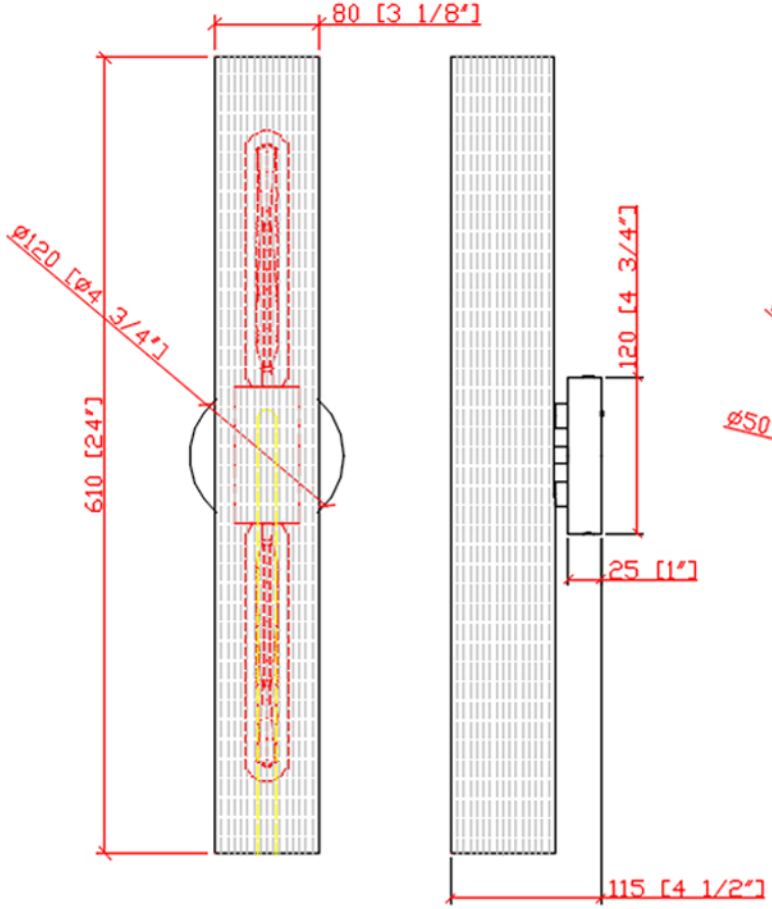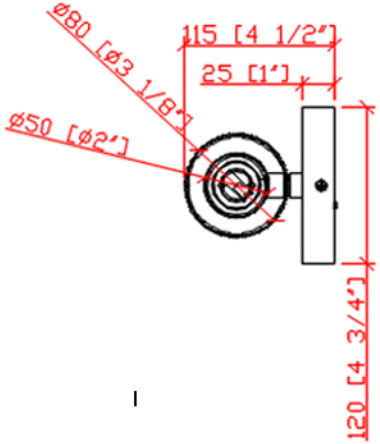Item No: A0311CH
Dimension: W4 3/4"xH24"xE4 1/2"
Canopy: D4 3/4"xE1"
Glass:D3 1/8"xH24"
Frame Material: Metal
Finish: Chrome
Shade:Clear ribbed glass
Light Source: 2xE26(bulb not incl.)
LED bulb max 9W
weight:1.2kg