

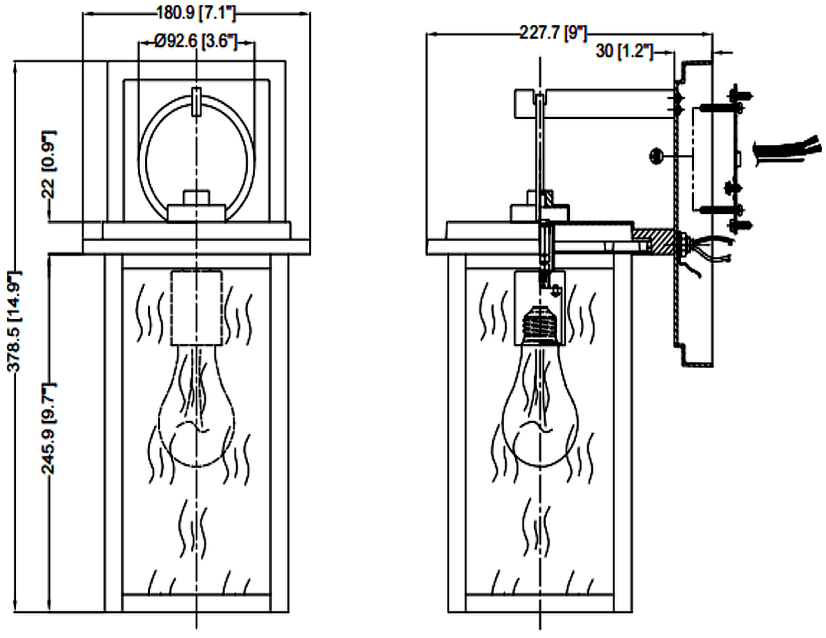


Item No: A0222MBK

Dimension: H14.9" x W7.1" x E9"

Wall canopy dimension: H8.3" x W5.6" x E1.2"

Glass dimension: 9.5" x 5.2"

Frame Material: Aluminum

Finish: BK

Glass Material: Clear Water Glass

Light Source: 1*E26 (bulb not incl.)

Weight: 1.8KG